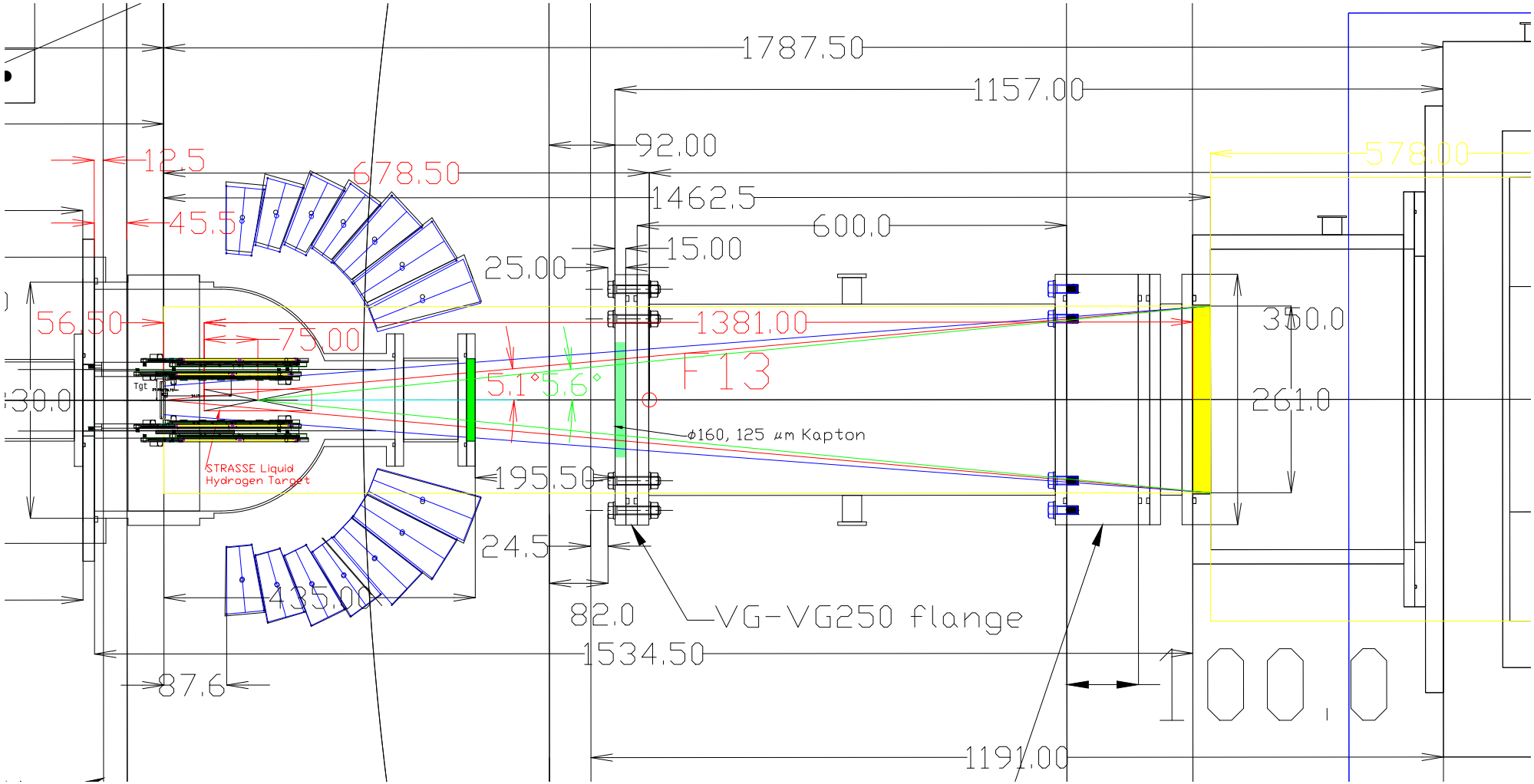
1787.50
1157.00
92.00
578.00
12.5
678.50
1462.5
45.5
600.0
15.00
25.00
56.50
1381.00
350.0
75.00
F13
5.1°
5.6°
261.0
Tgt
φ160, 125 μm Kapton
STRASSE Liquid
Hydrogen Target
195.50
24.5
435.00
82.0
VG-VG250 flange
1534.50
87.6
1191.00